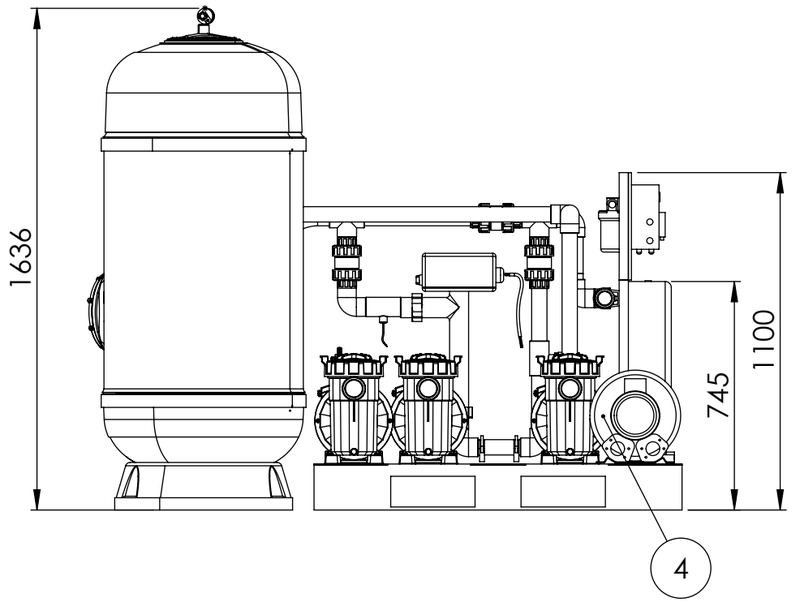

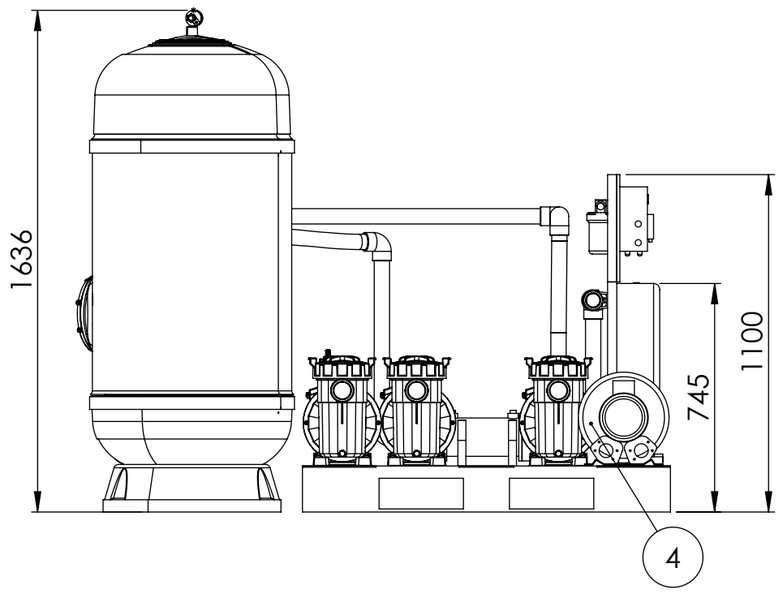

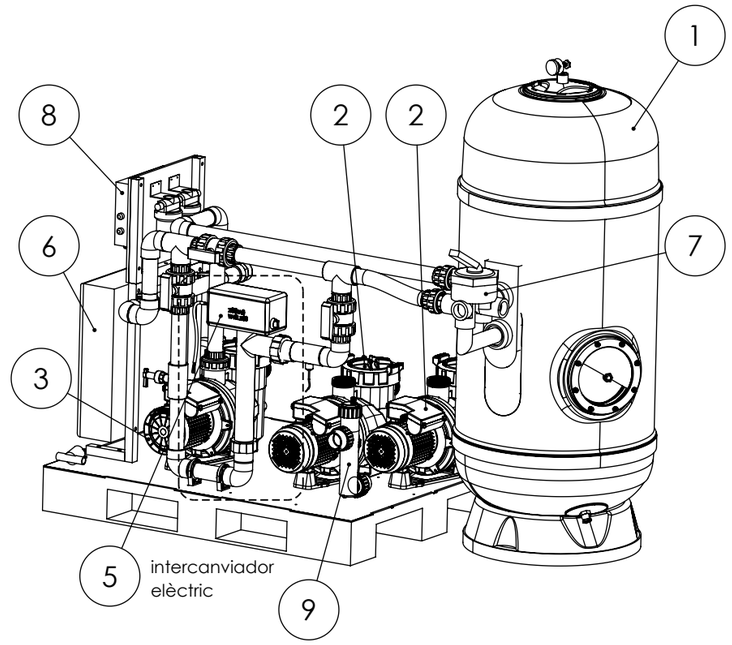

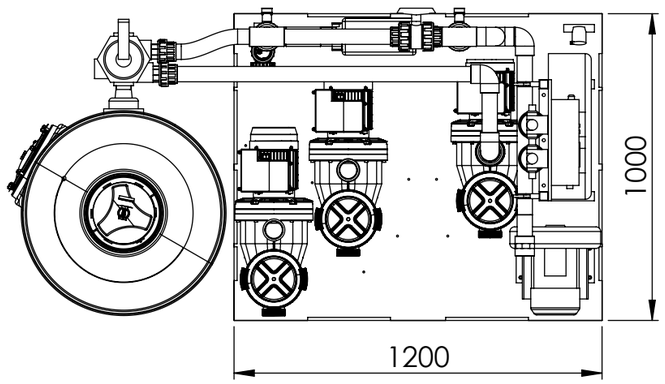

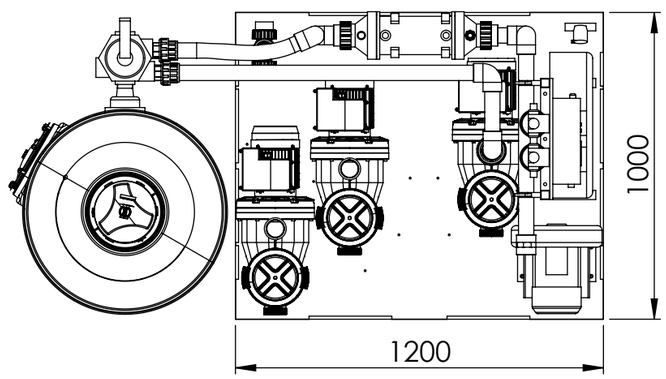

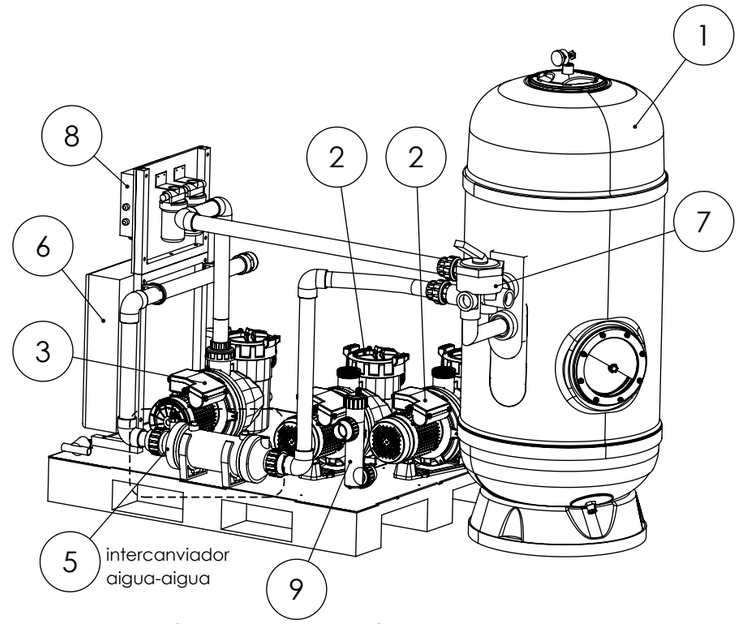

To fill the sand filter it's necessary to leave free 60cm on the top of the filter.

Connection pipes of: pump to filter and filter to heater are not included.

16412CE000	KIT COMPACTE 75 2m	intercanviador elèctric	50Hz
16412CE001	KIT COMPACTE 75 2m + DISINFECTION KIT		
16412CE002	KIT COMPACTE 75 2m + PH + REDOX		
16412CE006	KIT COMPACTE 75 2m + PH + REDOX PRO		
16412CE003	KIT COMPACTE 75 2m	intercanviador aigua-aigua	
16412CE004	KIT COMPACTE 75 2m + DISINFECTION KIT		
16412CE005	KIT COMPACTE 75 2m + PH + REDOX		
16412CE007	KIT COMPACTE 75 2m + PH + REDOX PRO		
16412CE010	KIT COMPACTE 75 2m	intercanviador elèctric	60Hz
16412CE011	KIT COMPACTE 75 2m + DISINFECTION KIT		
16412CE012	KIT COMPACTE 75 2m + PH + REDOX		
16412CE016	KIT COMPACTE 75 2m + PH + REDOX PRO		
16412CE013	KIT COMPACTE 75 2m	intercanviador aigua-aigua	
16412CE014	KIT COMPACTE 75 2m + DISINFECTION KIT		
16412CE015	KIT COMPACTE 75 2m + PH + REDOX		
16412CE017	KIT COMPACTE 75 2m + PH + REDOX PRO		

STANDARD COMPONENTS	
1	FILTER
2	MASSAGE PUMP
3	FILTRARION PUMP
4	BLOWER PUMP
5	HEATER
6	ELECTRIC BOX
7	SELECTOR VALVE
OPTIONAL COMPONENTS	
8	DOSIFICATION PH + REDOX
9	DISINFECTION KIT

According to our policy of continuous improvement, dimensions, features or components of this product can be partially or completely changedwithout prior notice.
It's Customer responsibility to verify that this is the last version of the drawing.

Revision *Revisión*	Date *Fecha*	Name *Nombre*	Modification *Modificación*
02	05/05/2014	I. Pozo	Update
03	05/07/2016	I. Pozo	Update
04	20/09/2017	Ricard S.	Update
05	25/05/2020	A.Miquel	Update components 2020
06	29/01/2025	Paula S.	canvi kit desinfecció amb ozó per UVA

Dimensions in mm. General Tolerances +/- 10mm

COMMERCIAL PUBLIC RANGE

	Date	Name
Drawn	22/11/2017	J. Jorba
Checked	29/01/2025	Bernat S.
Scale 1:20	General Tolerance DIN 7168 ISO 2768g	
Sheet 1/1		

iberspa

Code: 16412CE0XX

Rev.: 06

Size A3

First Angle Projection

Property of IBERSPA S.L. Avda. Plà d'Urgell 2-8 25200 Cervera, Spain. Don't use without permission. Keep this information confidential and use it solely for the permitted purpose.